DUPLOMATIC
HYDRAULICS

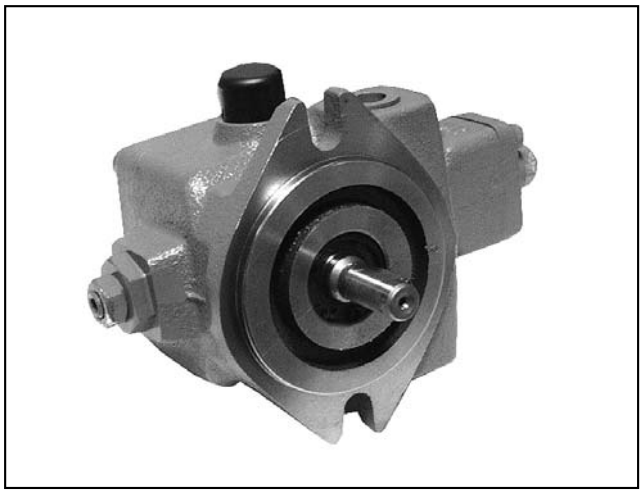

PVE

VARIABLE DISPLACEMENT VANE PUMPS WITH DIRECT PRESSURE REGULATOR

SERIES 10

OPERATING PRINCIPLE

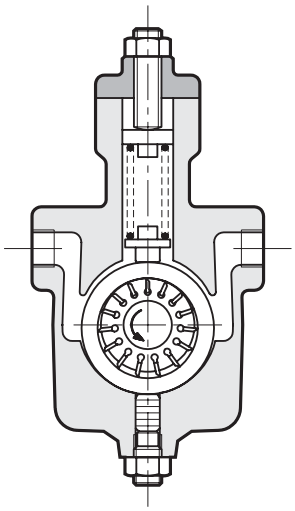

— The PVE pumps are variable displacement vane pumps with direct pressure regulator.

— The pump group is complete with hydrostatic axial compensation distribution plates that improve the volumetric efficiency and reduce wear of the components.

— The pressure regulator adjustable load spring keeps the pump group cam ring in eccentric position.

When the delivery pressure equals the pressure corresponding to the spring setting, the cam ring is moved so to reduce the displacement, adjusting the flow rate to the values required by the plant.

In zero flow demand conditions, the pump delivers oil only to compensate any possible bleedings, keeping the circuit pressure constant.

— The PVE pumps are available in four dimensions with maximum displacement from 6,6 to 23,3 cm^3/rev and with pressure regulator max setting values up to 35 bar and 70 bar (standard).

TECHNICAL SPECIFICATIONS

PUMP SIZE		**006**	**011**	**016**	**023**
Displacement	cm^3/rev	6,6	11,3	16,6	23,3
Flow rate (at 1.500 rpm and with minimum delivery pressure)	l/min	10,0	17,0	25,0	35,0
Operating pressure		see table 3 - Performances			
Rotation speed		see table 3 - Performances			
Rotation direction		clockwise (seen from the shaft side)			
Shaft loads:	N	radial and axial loads are not allowed			
Hydraulic connection		NPT threading fittings			
Type of mounting		SAE flange J744 - 2 holes		rectangular flange - 4 holes	
Mass	kg	5	5	9	9

Ambient temperature range	°C	-20 / +50
Fluid temperature range	°C	-10 / +70
Fluid viscosity range	see paragraph 2.2	
Fluid contamination degree	see paragraph 2.3	
Recommended viscosity	cSt	25 ÷ 50

HYDRAULIC SYMBOL

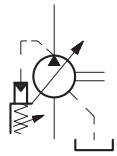

1 - IDENTIFICATION CODE

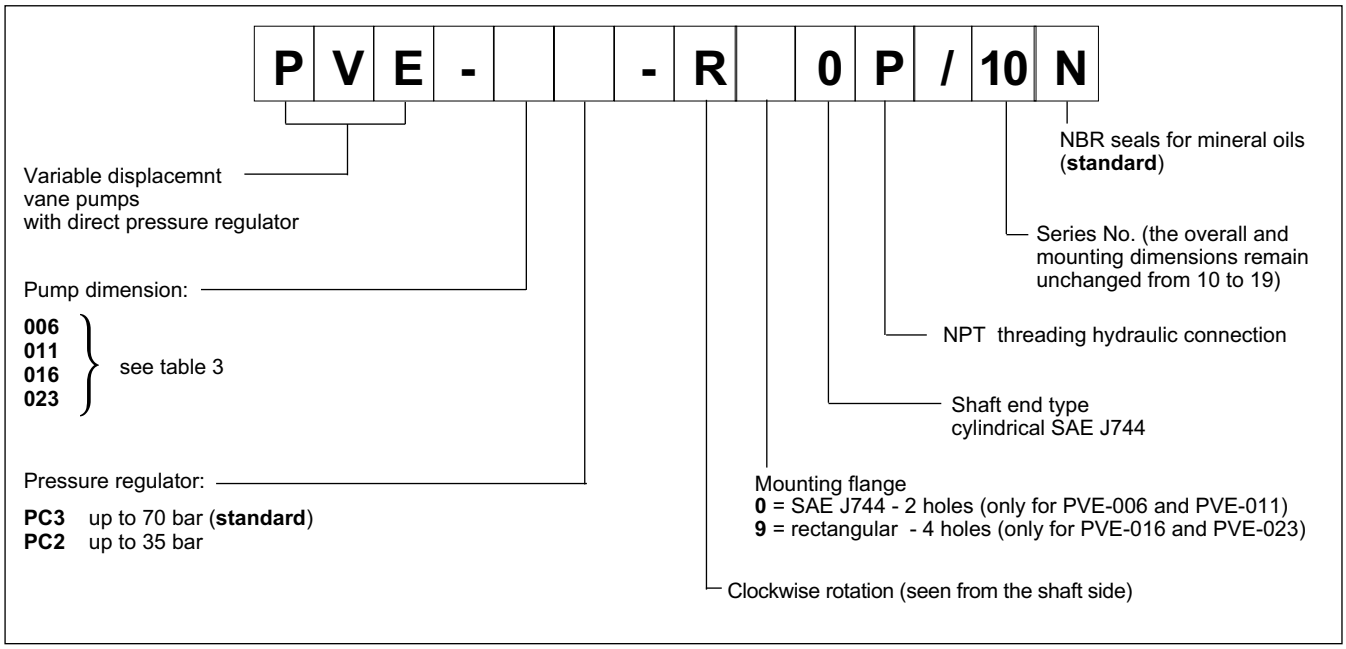

2 - HYDRAULIC FLUID

2.1 - Fluid type

Use only HL and HLP mineral oil based hydraulic fluids according to ISO 6743/4.

2.2 - Fluid viscosity

The operating fluid viscosity must be within the following range:

minimum viscosity	16 cSt	referred to the maximum drainage fluid temperature of 70 °C
optimum viscosity	25 ÷ 50 cSt	referred to the fluid working temperature in the tank
maximum viscosity	800 cSt	limited to only the start-up phase of the pump

When selecting the fluid type, be sure that the true viscosity is within the range specified above at the operating temperature.

2.3 - Degree of fluid contamination

The maximum degree of fluid contamination must be according to ISO 4406:1999 class 20/18/15; therefore, use of a filter with $\beta_{20} \geq 75$ is recommended. A degree of maximum fluid contamination according to ISO 4406:1999 class 18/16/13 is recommended for optimum endurance of the pump. Hence, use of a filter with $\beta_{10} \geq 100$ is recommended.

The filter must be equipped with a by-pass valve and, if possible, with a clogging indicator.

3 - PERFORMANCES (obtained with viscosity of 46 cSt at 40°C)

PUMP DIMENSION	REGULATOR TYPE	DISPLACEMENT [cm³/rev]	MAX FLOW RATE [l/min.] 1500 rev / 1800 rev		PRESSURE ADJ. RANGE [bar] MIN / MAX		MAX ROTATION SPEED [rpm]	MIN ROTATION SPEED [rpm]
PVE-006	PC2	6,6	10	12	15	35	1800	800
	PC3				40	70		
PVE-011	PC2	11,3	17	20	15	35		
	PC3				40	70		
PVE-016	PC2	16,6	25	30	15	35		
	PC3				40	70		
PVE-023	PC2	23,3	35	40	15	35		
	PC3				40	70		

Note: Flow rate values are obtained with minimum delivery pressure

4 - NOISE LEVEL

PUMP DIMENSION	NOISE LEVEL [dB (A)] zero displacement	full displacement
PVE-006	61	63
PVE-011	62	65
PVE-016	64	68
PVE-023	64	70

The noise pressure levels were measured in a semi-anecoic room, at an axial distance of 1 m from the pump.
The values shown must be reduced by 5 dB(A) if they are to be considered in a completely anecoic room.

5 - DRAINAGE FLOW RATE AT ZERO DISPLACEMENT

PUMP DIMENSION	DRAINAGE FLOW RATE [l/min]
PVE-006	0,4
PVE-011	0,8
PVE-016	1,2
PVE-023	1,2

Medium values obtained at max operating pressure

6 - PVE006 CHARACTERISTIC CURVES (values obtained with mineral oil with viscosity of 46 cSt at 40°C)

The diagram curves were measured with a pump rotation speed of 1800 rev/min

FLOW RATE / PRESSURE CURVES

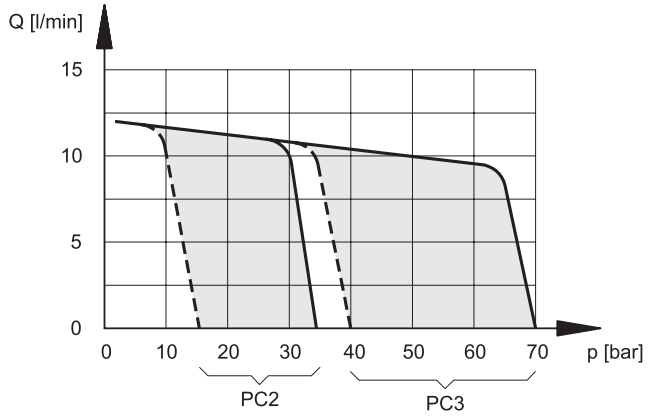

ABSORBED POWER

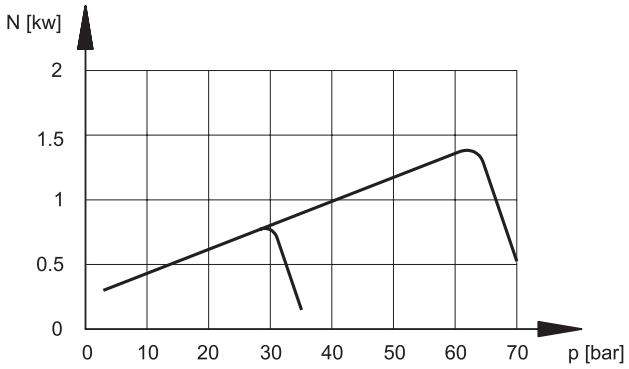

7 - PVE011 CHARACTERISTIC CURVES (values obtained with mineral oil with viscosity of 46 cSt at 40°C)

The diagram curves were measured with a pump rotation speed of 1800 rev/min

FLOW RATE / PRESSURE CURVES

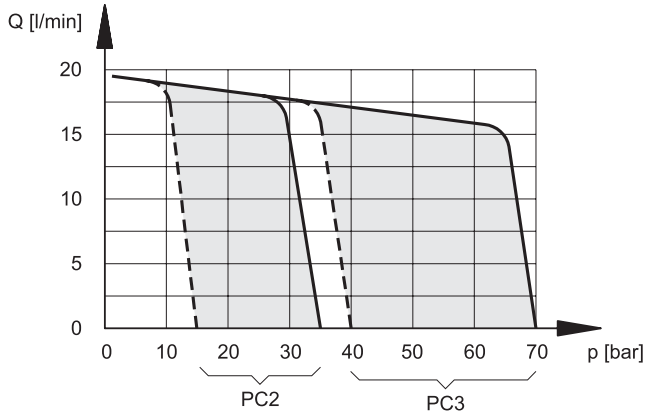

ABSORBED POWER

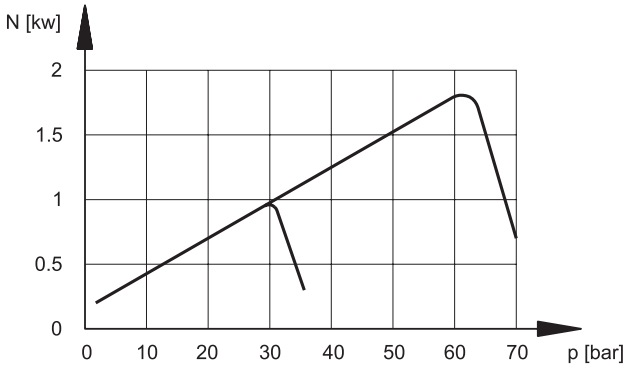

8 - PVE016 CHARACTERISTIC CURVES (values obtained with mineral oil with viscosity of 46 cSt at 40°C)

The diagram curves were measured with a pump rotation speed of 1800 rev/min

FLOW RATE / PRESSURE CURVES

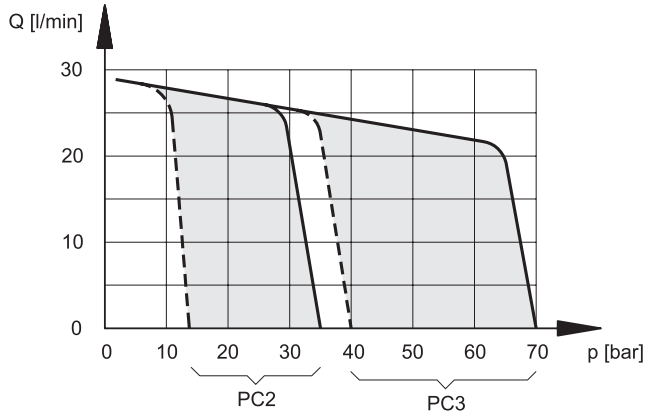

ABSORBED POWER

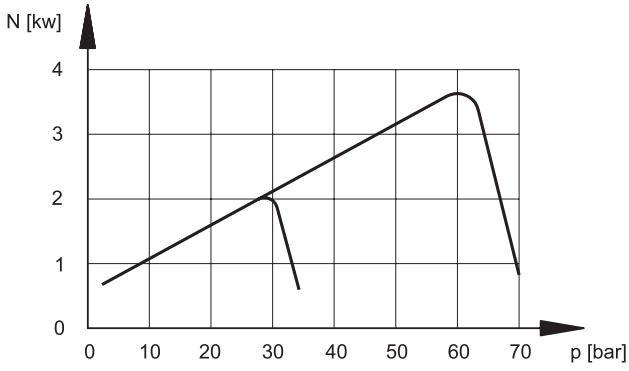

9 - PVE023 CHARACTERISTIC CURVES (values obtained with mineral oil with viscosity of 46 cSt at 40°C)

The diagram curves were measured with a pump rotation speed of 1800 rev/min

FLOW RATE / PRESSURE CURVES

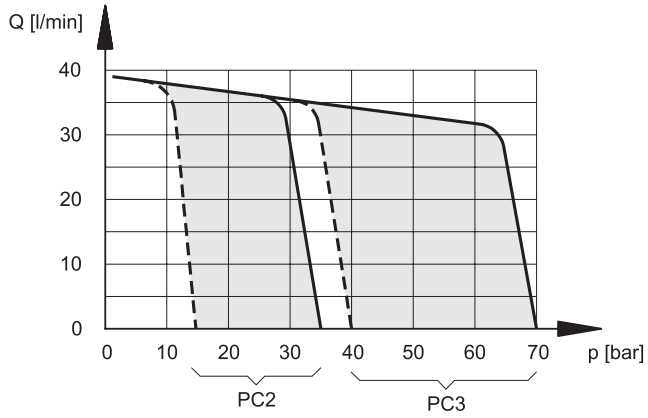

ABSORBED POWER

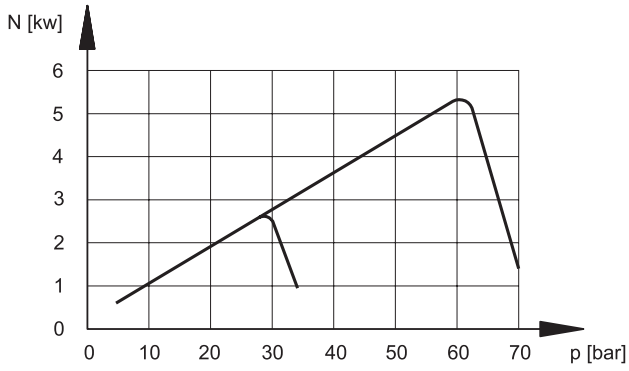

10 - OVERALL AND MOUNTING DIMENSIONS PVE-006 and PVE-011

dimensions in mm

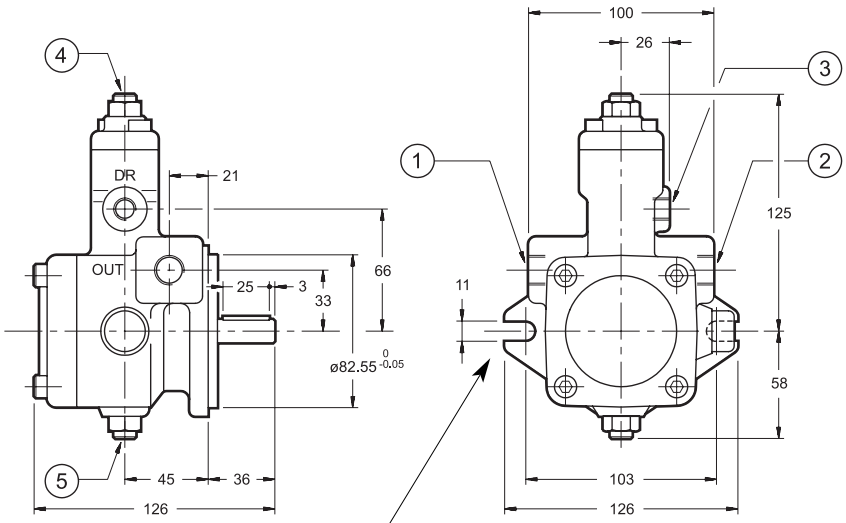

Cylindrical with key shaft end SAE J744
(identification code: **0**)

SAE J744 fitting flange - 2 holes (identification code: **0**)

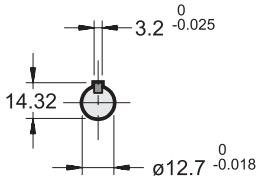

1	Suction port: 1/2” NPT
2	Delivery port: 3/8” NPT
3	Drainage port: 1/4” NPT
4	Pressure compensator. Clockwise rotation to increase pressure.
5	Flow rate regulator (only for PVE-011)

11 - OVERALL AND MOUNTING DIMENSIONS PVE-016 and PVE-023

dimensions in mm

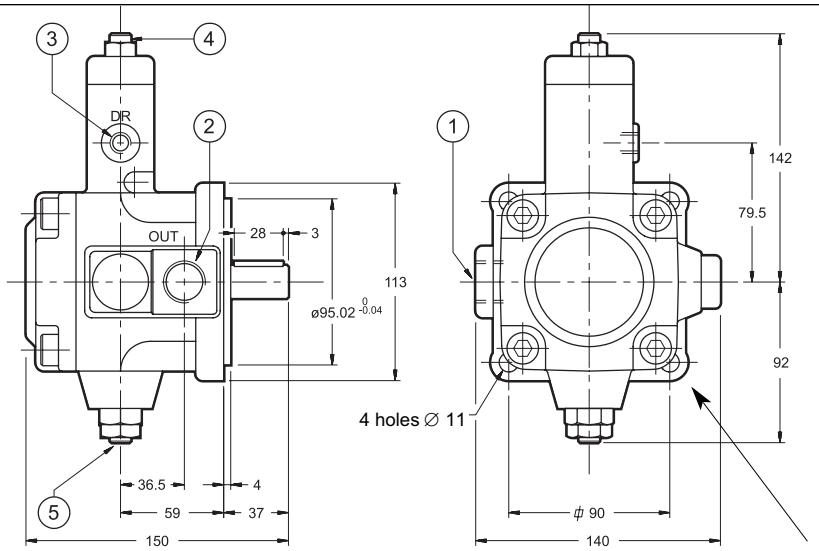

Rectangular fitting flange - 4 holes
(identification code: **9**)

Cylindrical with key shaft end SAE J744
(identification code: **0**)

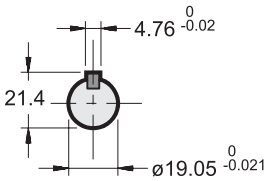

1	Suction port: 3/4” NPT
2	Delivery port: 1/2” NPT
3	Drainage port: 1/4” NPT
4	Pressure compensator. Clockwise rotation to increase pressure.
5	Flow rate regulator

12 - INSTALLATION

— The PVE pumps can be installed with the axis oriented in any position.

— The suction line must be suitably sized to facilitate the flow of oil. Bends and restrictions or an excessive line length can impair correct operation of the pump.

— The drainage port must be connected directly to the tank by a line separate from other discharges, located far from the suction line and lengthened to below the minimum oil level so as to avoid formation of foam.

— The pump start up, especially at a cold temperature, should occur with the pump unloading.

— The pumps are normally positioned directly above the oil tank. Flooded suction port installation of the pumps is advisable in the case of circuits with high flow rates and pressures.

— The motor-pump connection must be carried out directly with a flexible coupling. Couplings that generate axial or radial loads on the pump shaft are not allowed.

13 - MULTIPLE PUMPS

PVE-016 and PVE-023 pumps can be connected to external gear pumps (see characteristics in the table at par. 13.2)

13.1 - Multiple pumps identification code

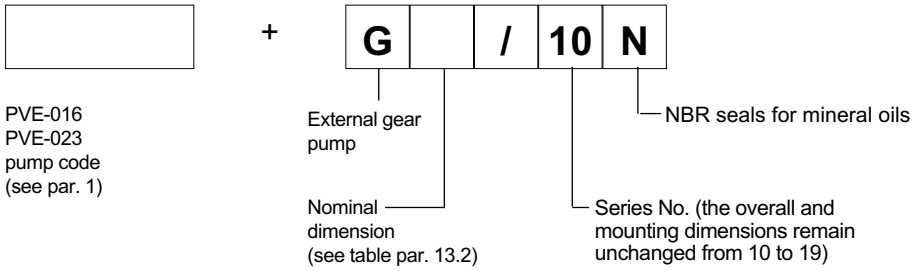

13.2 - Multiple pumps overall and mounting dimensions

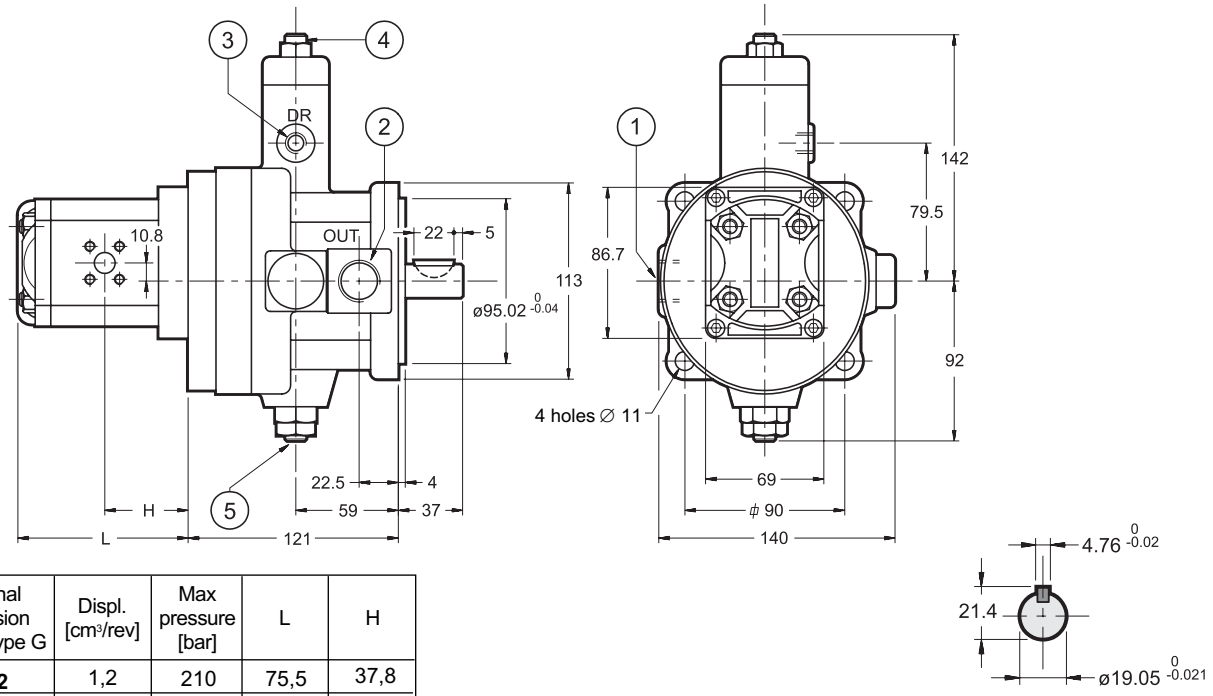

Nominal dimension pumps type G	Displ. [cm³/rev]	Max pressure [bar]	L	H
0012	1,2	210	75,5	37,8
0017	1,7	210	77	38,5
0022	2,2	210	79	39,5
0026	2,6	210	81	40,5
0032	3,2	210	83	41,5
0038	3,8	210	85	42,5
0043	4,3	210	87	43,5
0062	6,2	190	94	47
0078	7,8	180	100	50

1	Suction port: 3/4” NPT
2	Delivery port: 1/2” NPT
3	Drainage port: 1/4” NPT
4	Pressure compensator. Clockwise rotation to increase pressure.
5	Flow rate regulator

DUPLOMATIC
HYDRAULICS

DUPLOMATIC OLEODINAMICA SpA
20025 LEGNANO (MI) - P.le Bozzi, 1 / Via Edison
Tel. 0331/472111 - Fax 0331/548328

REPRODUCTION IS FORBIDDEN, THE COMPANY RESERVED THE RIGHT TO APPLY ANY MODIFICATIONS